Chicago Pneumatic

CP749 & CP749-2 Series

Impact Wrench 1/2"

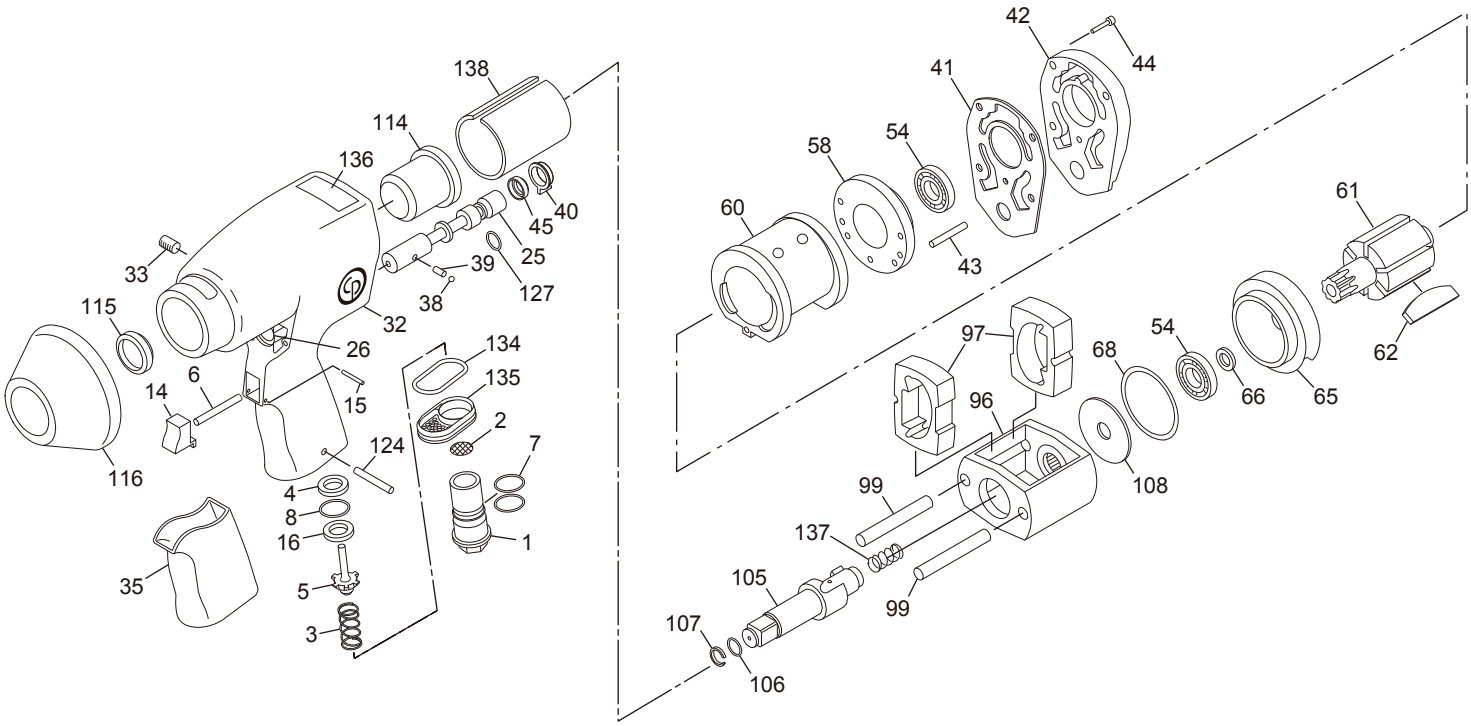

Index No.	Part No.	Description	Qty.
1	CA147022	Bushing-Air Inlet	1
2	CA059037	Screen-Air	1
3	CA142464	Spring-Throttle	1
4	CA149095	Spacer	1
5	CA142460	Valve-Throttle	1
6	CA144831	Pin-Throttle Push	1
7	C105693	O-Ring	2
8	CA149096	O-Ring	1
14	CA147017	Trigger-Throttle	1
15	CA144836	Pin-Trigger	1
16	C139037	Seat-Throttle	1
25	CA147016	Valve-Reverse	1
26	CA147015	Bushing-Reverse Valve	1
32	CA148615	Housing-Motor (Incl: Index No. 26)	1
33	S089953	Plug-Pipe	1
35	8940158432	Handle-Cover	1
38	S008613	Ball	1
39	CA147021	Spring-Detent	1
40	CA155263	Switch	1
41	CA148613	Gasket-Housing Cover (Model C)	1
	8940158633	Gasket-Housing Cover (Model D)	1
42	CA148602	Cover-Motor Housing (Model C)	1
	8940158632	Cover-Motor Housing (Model D)	1
43	C085245	Pin-Liner Dowel	1
44	CA155947	Screw w/Lockwasher	4
45	8940158535	Spacer (Model D)	1
54	C066342	Bearing-Ball	2
58	KF136268	Plate-Rear End	1
60	CA148607	Liner	1
61	CA148606	Rotor	1
62	CA148605	Set-Rotor Blade (set of 6)	1
65	KF134665	Plate-Front End	1
66	CA087513	Seal-Oil	1
68	C087266	O-Ring	1

Index No.	Part No.	Description	Qty.
96	CA155733	Cage-Clutch	1
97	CA155055	Dog-Clutch	2
99	CA155734	Pin-Clutch (Model C)	2
	CA145470	Pin-Clutch (Model B)	2
105	CA148609	Shank-Anvil CP749 Incl. Index Nos. 106, 107	1
	CA148629	Shank-Anvil CP749-2 Incl. Index Nos. 106, 107	1
106	P083071	O-Ring	1
107	CA088097	Retainer-Socket	1
108	CA145569	Washer-Clutch	1
114	CA148611	Bushing-Clutch	1
115	CA148608	Seal-Oil	1
116	CA148626	Shield-Nose	1
124	R086991	Pin-Roll	1
127	CA147018	O-Ring	1
134	CA148528	Gasket	1
135	CA147023	Deflector-Exhaust	1
136	CA155779	Safety label	1
137	CA154959	Spring	1
138	CA154960	Sleeve - Steel	1

Tune-Up Kit

8940158635 Incl. Index Nos. 7, 8, 41, 62, 66, 68, 106, 107, 115, 127 & 134

Repair Kit

8940158636 for CP749 Incl. Index Nos. 7, 8, 41, 62, 66, 68, 97, 99, 105, 106, 107, 108, 115, 127, 134 & 137)

8940158637 for CP749-2 Incl. Index Nos. 7, 8, 41, 62, 66, 68, 97, 99, 105, 106, 107, 108, 115, 127, 134 & 137

Conversion Kit Model C to Model D

8940158674 Incl. Index Nos. 41, 42 & 45

CA155269	OPERATOR'S MANUAL
8940169120	CE DECLARATION
6159948710	SAFETY INSTRUCTIONS